Series 8, Flex induction hob, 80 cm, Black
PXY875DE3E

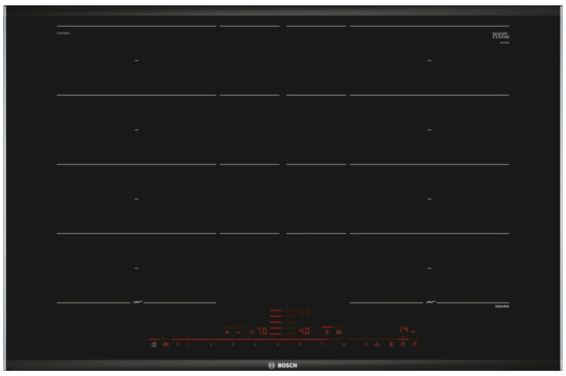

Included accessories
1 x wireless temperature sensor for cooktop

The induction hob with PerfectCook and PerfectFry: achieve optimal results thanks to automatic temperature control.

- **DirectSelect Premium:** Direct, simple selection of the desired cooking zone, power and additional functions.
- **Expanded FlexInduction Zone:** Even more flexibility by connecting the cooking zones into one big zone, which you can make even larger for the big pots.
- **PerfectCook:** Prevents overcooking and boiling over by precise controlling the cooking temperature.
- **ComfortProfil:** Elegant, appealing design with bevelled front and metal strips on the side.
- **MoveMode:** the automatic setting of cooking levels allows fast boiling on the front, cooking on the middle and simmering on the rear cooking zone.

Technical Data

Product name/family : Cooking zone ceramic
Construction type : Built-in
Energy input : Electric
Total number of positions that can be used at the same time : 4
Required niche size for installation (HxWxD) : 51 x 750-780 x 490-500 mm
Width of the appliance : 816 mm
Dimensions : 51 x 816 x 527 mm
Dimensions of the packed product (HxWxD) : 126 x 953 x 603 mm
Net weight : 17.2 kg
Gross weight : 18.7 kg
Residual heat indicator : Separate
Location of control panel : Hob front
Basic surface material : Ceramic
Color of surface : Black
Approval certificates : AENOR, CE
Length electrical supply cord : 110 cm
Sealed Burners : No
heating with booster : All
Power of 2nd heating element (kW) : 3.3 kW
Power of heating element (kW in boost) : [3.7] kW
: 3.7 kW
Power of 6th heating element (kW in boost) : 3.7 kW
Connection Rating : 7400 W
Voltage : 220-240 V
Frequency : 50; 60 Hz
Main colour of product : Black
Energy input : Electric
Approval certificates : AENOR, CE
Plug type : no plug (electrical connection by electrician)
Appliance Dimensions (h x w x d) (in) : + x x
Dimensions of the packed product : 4.96 x 23.74 x 37.51
Net weight : 38.000 lbs
Gross weight : 41.000 lbs
Total number of positions that can be used at the same time : 4
Length electrical supply cord : 110 cm
Required niche size for installation (HxWxD) : 51 x 750-780 x 490-500 mm
Dimensions : 51 x 816 x 527 mm
Dimensions of the packed product (HxWxD) : 126 x 953 x 603 mm
Net weight : 17.2 kg
Gross weight : 18.7 kg

4 242002 939216

Series 8, Flex induction hob, 80 cm, Black
PXY875DE3E

The induction hob with PerfectCook and PerfectFry: achieve optimal results thanks to automatic temperature control.

- Cooking zones will be automatically joined or separated based on the shape and size of the cookware placed.

Series 8, Flex induction hob, 80 cm, Black
PXY875DE3E

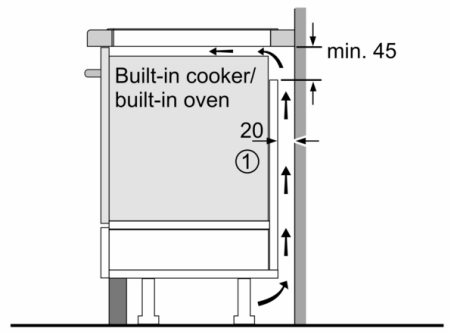

① Ventilation gap must be present

All measurements in mm

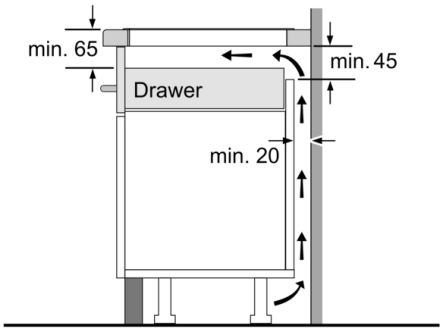

Measurements in mm

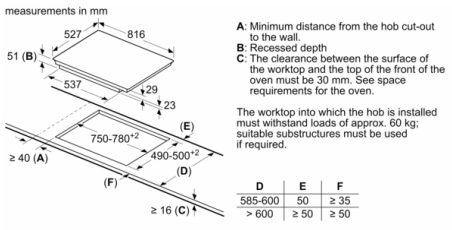

D	E	F
585-600	50	≥ 35
> 600	≥ 50	≥ 50

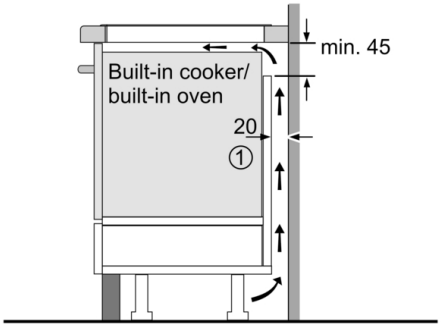

① Ventilation gap must be present

All measurements in mm

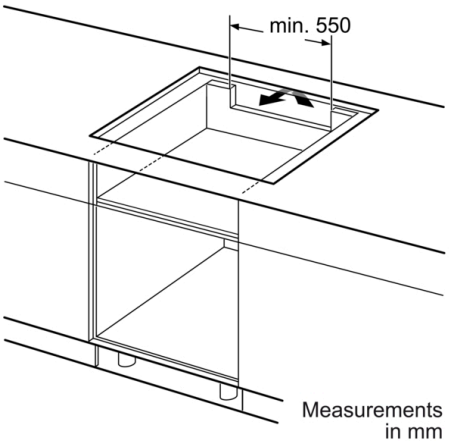

Measurements in mm